REPORT DOCUMENTATION FORM
WATER RESOURCES RESEARCH CENTER
University of Hawaii at Manoa

[1]Report Number Technical Report No. 159	[2]FCST Category 05-D
[3]Title *Decontamination of Chromium-Contaminated Soil in Hawai'i*	[4]Report Date March 1984 [5]No. of Pages viii + 23 [6]No. of Tables 2 / [7]No. of Figures 7
[8]Author(s) Dr. Gordon L. Dugan Mr. Henry K. Gee Dr. L. Stephen Lau	[9]Grant Agency U.S. Department of the Navy Pacific Division Naval Facilities Engineering Command Pearl Harbor, Hawaii [10]Grant/Contract No. N62742-82-C-0001

[11]Descriptors: *chromium, *soil contamination, *soil treatment, chemical precipitation
Identifiers: *hazardous waste, Pearl Harbor Naval Shipyard, Oahu, Hawaii

[12]Abstract (Purpose, method, results, conclusions)

Approximately 1 841 m^3 (65,000 ft^3) of chromium-contaminated soil, classified as hazardous waste (>5 mg/ℓ chromium extract concentration as measured by the EP toxicity test) was found near the new pipe shop at the Pearl Harbor Naval Shipyard on Oahu, Hawaii. Unless treated to a safe level, the contaminated soil required disposal in a Class 1 landfill, the closest being in the continental United States. Based on simple laboratory and pilot plant procedures, the project proved that chromium could be effectively leached from the soil to a safe level by using a nearly 1:4 weighted soil to water ratio; reducing the pH to 2.5; adding sodium metabisulfite to chemically reduce chromium from Cr^{+6} to Cr^{+3}; and then raising the pH to 8.5 to precipitate the chromium from solution. A full-scale operation, following the technology that was developed, successfully treated the soil to a safe level and subsequent testing of the treated soil at the disposal (landfill) site confirmed the effectiveness of the treatment operation.

2540 Dole Street, Holmes Hall 283 • Honolulu, Hawaii • U.S.A.

AUTHORS:

Dr. Gordon L. Dugan, Chairman
and Professor of Civil Engineering
Department of Civil Engineering
University of Hawaii at Manoa
2540 Dole St., Holmes Hall 384
Honolulu, Hawaii 96822
(808) 948-7550

Mr. Henry K. Gee, Research Associate
Water Resources Research Center
University of Hawaii at Manoa
2540 Dole St., Holmes Hall 182
Honolulu, Hawaii 96822
(808) 948-8008

Dr. L. Stephen Lau, Director
Water Resources Research Center
University of Hawaii at Manoa
2540 Dole St., Holmes Hall 283
Honolulu, Hawaii 96822
(808) 948-7847

$1.00/copy
Checks payable to: Research Corporation, University of Hawaii

Mail to: University of Hawaii Manoa
Water Resources Research Center
2540 Dole St., Holmes Hall 283
Honolulu, Hawaii 96822

Tel.: (808) 948-7847 or -7848

DECONTAMINATION OF CHROMIUM-CONTAMINATED SOIL IN HAWAI'I

Gordon L. Dugan
Henry K. Gee
L. Stephen Lau

Technical Report No. 159

March 1984

Research Project Completion Report
for
Laboratory and Pilot Plant Testing of Methods
for Decontamination of Chromium Contaminated Soil and Water,
Pearl Harbor Naval Shipyard, Pearl Harbor, Hawaii

Contract No. N62742-82-C-0001
U.S. Department of the Navy, Pacific Division,
Naval Facilities Engineering Command, Pearl Harbor, Hawaii

Principal Investigator: Gordon L. Dugan

WATER RESOURCES RESEARCH CENTER
University of Hawaii at Manoa
2540 Dole Street
Honolulu, Hawaii 96822

ABSTRACT

Approximately 1 841 m^3 (65,000 ft^3) *of chromium-contaminated soil, classified as hazardous waste* (>5 *mg/ℓ chromium extract concentration as measured by the EP toxicity test) was found near the new pipe shop at the Pearl Harbor Naval Shipyard on O'ahu, Hawai'i. Unless treated to a safe level, the contaminated soil required disposal in a Class* 1 *landfill, the closest being in the continental United States. Based on simple laboratory and pilot plant procedures, the project proved that chromium could be effectively leached from the soil to a safe level by using a nearly* 1:4 *weighted soil to water ratio; reducing the pH to* 2.5; *adding sodium metabisulfite to chemically reduce chromium from* Cr^{+6} *to* Cr^{+3}; *and then raising the pH to* 8.5 *to precipitate the chromium from solution. A full-scale operation, following the technology that was developed, successfully treated the soil to a safe level and subsequent testing of the treated soil at the disposal (landfill) site confirmed the effectivness of the treatment operation.*

CONTENTS

ABSTRACT v

INTRODUCTION 1

METHODOLOGY 2

RESULTS AND DISCUSSION OF LABORATORY/PILOT PLANT TESTING 6

Chromium-Contaminated Soil Samples 6

Laboratory Soil Leaching Methods 6

Pilot Plant Soil Leaching Methods 10

Chromium Removal in Leachate 11

FULL-SCALE TREATMENT OPERATION 18

RANDOM SAMPLING AND ANALYSIS OF SOIL AT DISPOSAL SITE 19

ACKNOWLEDGMENTS 21

REFERENCES 22

Figures

1. Soil Leaching Containers 3
2. Sand Drying Bed Model 4
3. Testing Sequence in Laboratory Bench and Pilot Plant Investigation for Chromium Treatment 5
4. Hexavalent Chromium Soil Residue (EP) Concentration vs. Weighted Soil to Water Ratio 7
5. pH vs. Quantity of 0.1 N Sulfuric Acid 12
6. Sludge Settling Curves for Sodium Metabisulfite and Ferrous Sulfate Reduction Methods With Lime 16
7. Laboratory Bench and Pilot Plant Investigation Sequence for Chromium Treatment 17

Tables

1. Relation of Reaction Time and pH for 99% Completion of Hexavalent to Trivalent Chromium When Sodium Metabisulfite Added 12

2. Relationships of Chemicals and Physical Conditions Involved in Removing 1.0 Weight Unit of Hexavalent Chromium 13

INTRODUCTION

An estimated 1 841 m^3 (65,000 ft^3) of chromium-contaminated soil was found under and adjacent to the new pipe shop at the Pearl Harbor Naval Shipyard on O'ahu, Hawai'i. The contaminated soil was excavated and stored temporarily in an adjacent building (3A); however, the plans called for the soil to be removed from the building by the end of 1982 (Mau 1981a,b). The chromium-contaminated soil was classified as a hazardous waste because the soil leachate, measured by the standard extraction procedure (EP) toxicity test (U.S. EPA 1980), had a chromium extract concentration of >5 mg/ℓ (hazardous waste limit). In the course of the test, the leachate was diluted 1:20 before the final total extract value was determined. Thus, the 5-mg/ℓ limit actually represents an original concentration of 100 mg/ℓ. If the chromium concentration of the soil could not be treated to the acceptable level (total chromium <5 mg/ℓ extract), the contaminated soil would then require placement in a suitably sealed container and shipment to the continental U.S. for disposal in a Class 1 landfill. The original engineers' estimate of the overall cost of removal, shipment, and disposal of the contaminated soil was $500 per 0.21-$m^3$ (55-gal) drum (Mau 1981a).

According to the preliminary laboratory study by Yamamoto (1981), chromium in the soil under the new pipe shop could be readily leached to <5 mg/ℓ, which would allow handling by normal soil application, stockpiling, and disposal practices. However, to evaluate the technical and economic feasibilities of at least treating the chromium-contaminated soil to acceptable levels within the imposed time constraints, several pertinent questions, such as leaching time and water requirements, pH, and chemicals, had to be immediately addressed at the laboratory and pilot plant scale. The maximum chromium limits allowable for process water at the receiving treatment plant (U.S. Navy, Fort Kamehameha Wastewater Treatment Plant) were 2.5 mg/ℓ (avg.) for total chromium (5.0 mg/ℓ maximum concentration) and 0.25 mg/ℓ as hexavalent chromium (Cr^{+6}) (0.50. mg/ℓ maximum). No limitation was placed on quantity, but the pH had to be within the 6- to 10-range.

The apparent high cost for disposal of the untreated contaminated soil, and the preliminary laboratory study which indicated that chromium could be leached from the stockpiled contaminated soil to the acceptable level, induced the U.S. Navy to explore potential chromium removal treatment alterna-

tives. Thus, the U.S. Navy contracted with the University of Hawaii's Water Resources Research Center (WRRC) to perform laboratory and pilot plant studies to verify and develop practical methods for leaching out chromium to the acceptable EP soil extract level; remove chromium from the leachate; dewater and dry the sludge; and provide parameters and criteria for a full-scale treatment facility. Because of the 45 day time constraint from initiation of the project to completion of the Phase 1 report, only the treatment options that appeared the most promising in the literature or by preliminary testing were explored. The results of Phase 1 were presented in a special report (Dugan, Gee, and Lau 1982).

METHODOLOGY

The laboratory bench and pilot plant studies were conducted at the University of Hawaii at Manoa campus. The basic soil leaching unit for the laboratory bench portion was a 63.5 mm (2.5 in.) diameter, 1.83 m (6 ft) long Plexiglas column (Fig. 1). The remainder of the laboratory bench studies was conducted by using standard laboratory glassware, such as beakers, flasks, and graduated cylinders.

Pilot plant sizing for the soil leaching and the chromium removal (reduction/precipitation) from the leachate was carried out by using refabricated 0.21-m^3 (55-gal) drums in various sequences as the principal processing units. A schematic drawing of a refabricated steel drum is presented in Figure 1. A sand drying bed model of 19.1-mm (3/4-in.) plywood with inner dimensions of 0.305 x 0.305 m (12 x 12 in.) wide by 0.184 m (7 $\frac{1}{4}$ in.) deep, containing 76.2 mm (3 in.) of sand over 25.4 mm (1 in.) of aggregate (Fig. 2), served as one of the pilot plant's basic dewatering units. No other special facilities or equipment were used in the pilot plant phase. Other units, such as pumps, mixers, and containers, were readily available laboratory and field testing components.

Simple technology was used as much as practicable in the laboratory and pilot plant phase to decrease potential "start-up/shake-down" time, and to enhance the application of these results to the full-scale facility.

An optimized sequential component testing outline is presented in Figure 3. Promising processes in the laboratory bench portion of the study

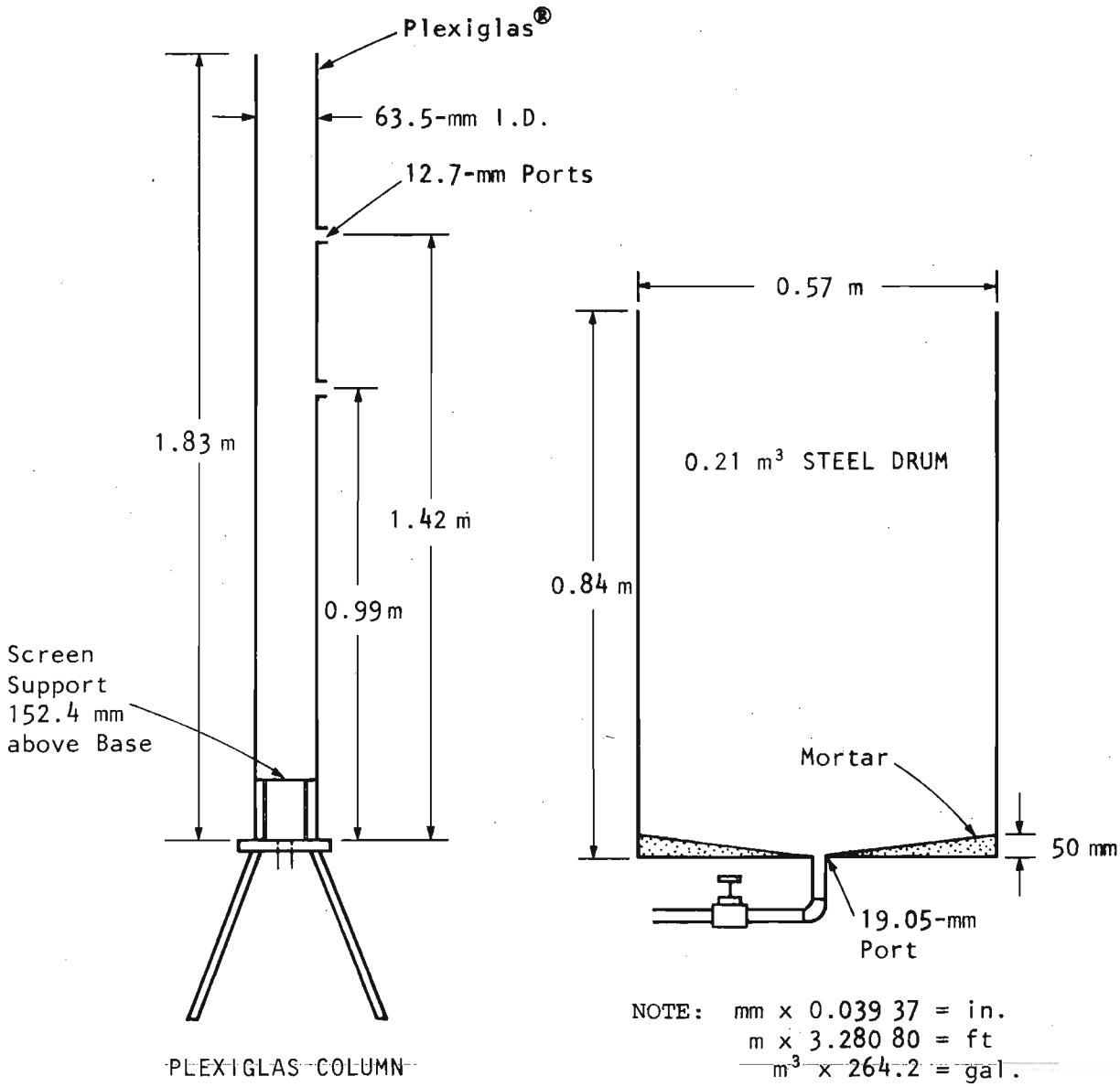

Figure 1. Soil leaching containers

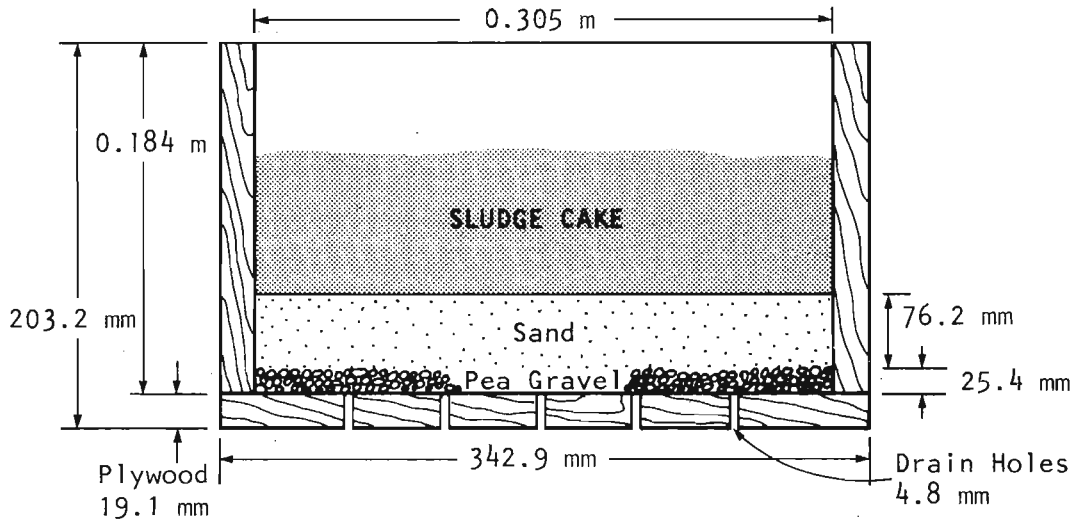

NOTE: 5 x 5 (25) layout of 4.8 mm drain holes
NOTE: mm x 0.039 37 = in.

Figure 2. Sand drying bed model

were further tested in the pilot plant to determine probable success in the full-scale plant operation.

As shown in Figure 3, the leaching phase was tested in several different modes. The quantity of water input to and leachate from the column and/or drums were accurately monitored together with chromium concentrations and pH. From this information, relationships between original soil chromium concentration, applied wash water, and leachate chromium concentration were established for each wash/leachate cycle. The soil chromium concentration as measured by standard extract test procedures (U.S. EPA 1980) was compared to the final leachate concentration for that particular washing cycle.

According to the literature, the most effective method of removing chromium from the liquid phase is apparently reducing the hexavalent chromium (Cr^{+6}) to the trivalent state (Cr^{+3}), and then precipitating with lime (Eckenfelder 1980, pp. 476-88). Chromium analysis was in accordance with Standard Methods (APHA, AWWA, and WPCF 1980, sec. 312 B, Colorimetric Method).

The three common reducing agents were ferrous sulfate ($FeSO_4$), sodium metabisulfite ($Na_2S_2O_5$), and sulfur dioxide (SO_2). The first two can be applied either dry or fed in solution, while the latter (SO_2) is obtained from gas cylinders, which essentially eliminated it from further consider-

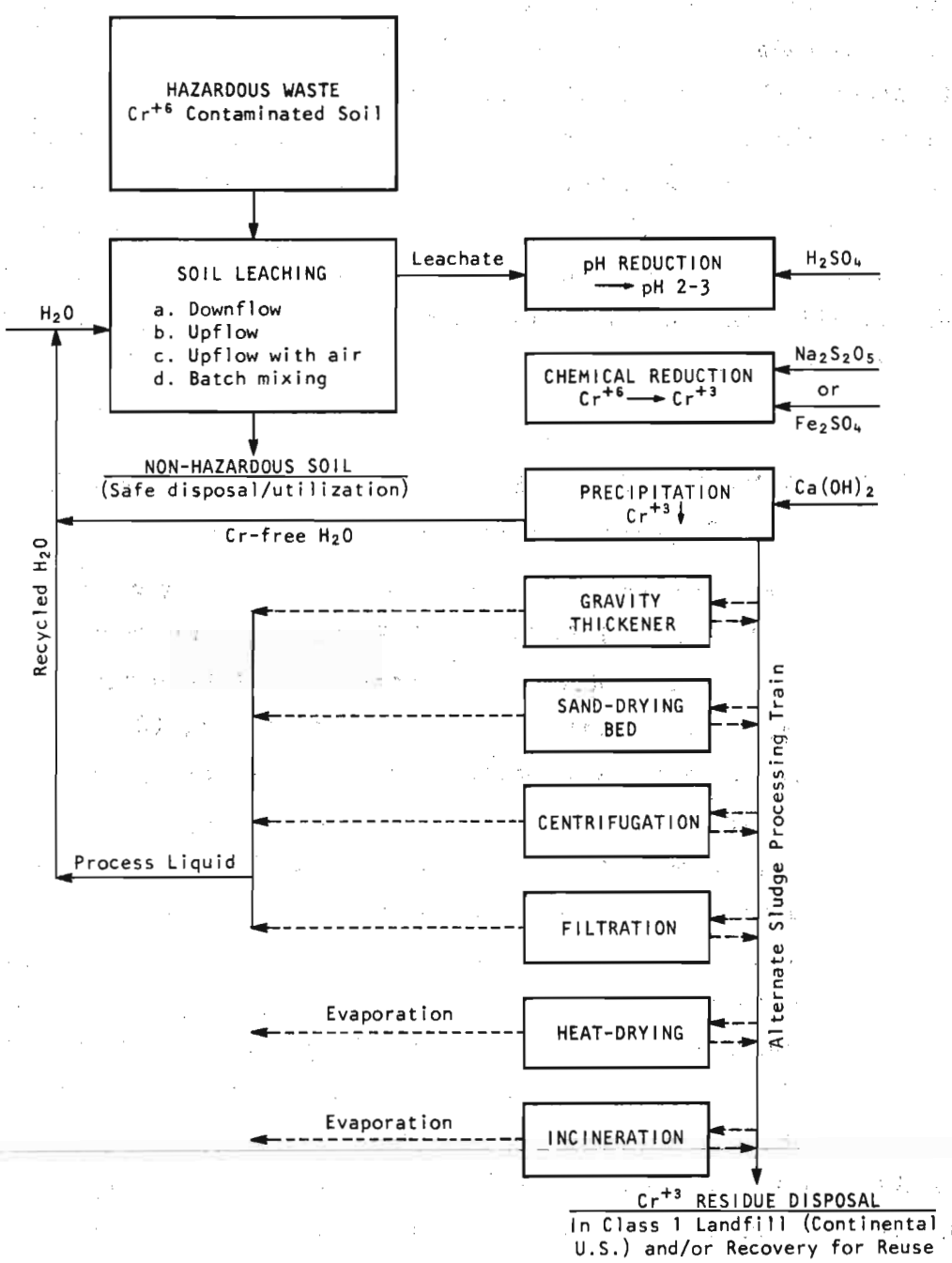

Figure 3. Testing sequences in laboratory bench and pilot plant for chromium treatment

ation for this project because of the difficulty in handling. Each of the reducing agents has its own idiosyncrasies and pH ranges. The optimum reducing agent, method of application, stirring requirement, contact time, and concentration for the situation would have to be determined in the laboratory bench and under pilot plant conditions.

The reduced chromium was then treated with lime to raise the pH for the precipitation phase. The supernatant could then be reintroduced to the soil leaching drums, while the settled sludge could be dewatered by the various methods of the alternate sludge processing train (Fig. 3) or even disposed of as is, depending on the economics of disposal versus the cost of dewatering. The liquid from the dewatering processes could be recycled through the leaching/treatment phases.

RESULTS AND DISCUSSION OF LABORATORY/PILOT PLANT TESTING

Chromium-Contaminated Soil Samples

Composited chromium soil samples were obtained at two different time periods: one in September 1981 by the U.S. Navy Public Works Center Laboratory personnel; and the other on 7 December 1981 by project personnel. The first samples, which contained approximately 9.1 kg (20 lb) of composited chromium soil samples, was utilized for the laboratory bench studies, while the later samples weighing 424.6 kg (936 lb) was used in the pilot plant studies. The former soil sample was thoroughly mixed by hand, while the latter was mixed for 30 min in a concrete mixer. The moisture content of the collected samples was 19% and the specific gravity averaged 1.20. The extracted hexavalent chromium (Cr^{+6}) residue value (>90% of total chromium extract), performed by the standard EP extract procedure (U.S. EPA 1980) on the soil used in the laboratory bench studies, averaged 15.8 mg/ℓ, while the soil used for the pilot plant studies averaged 12.4 mg/ℓ. Reference to the contaminated soil throughout the report will be based on the 19% moisture under in situ soil conditions, unless stated otherwise.

Laboratory Soil Leaching Methods

The four basic methods of soil leaching shown in Figure 4 (downflow, continuous upflow, continuous upflow with air, and batch mixing) were tested

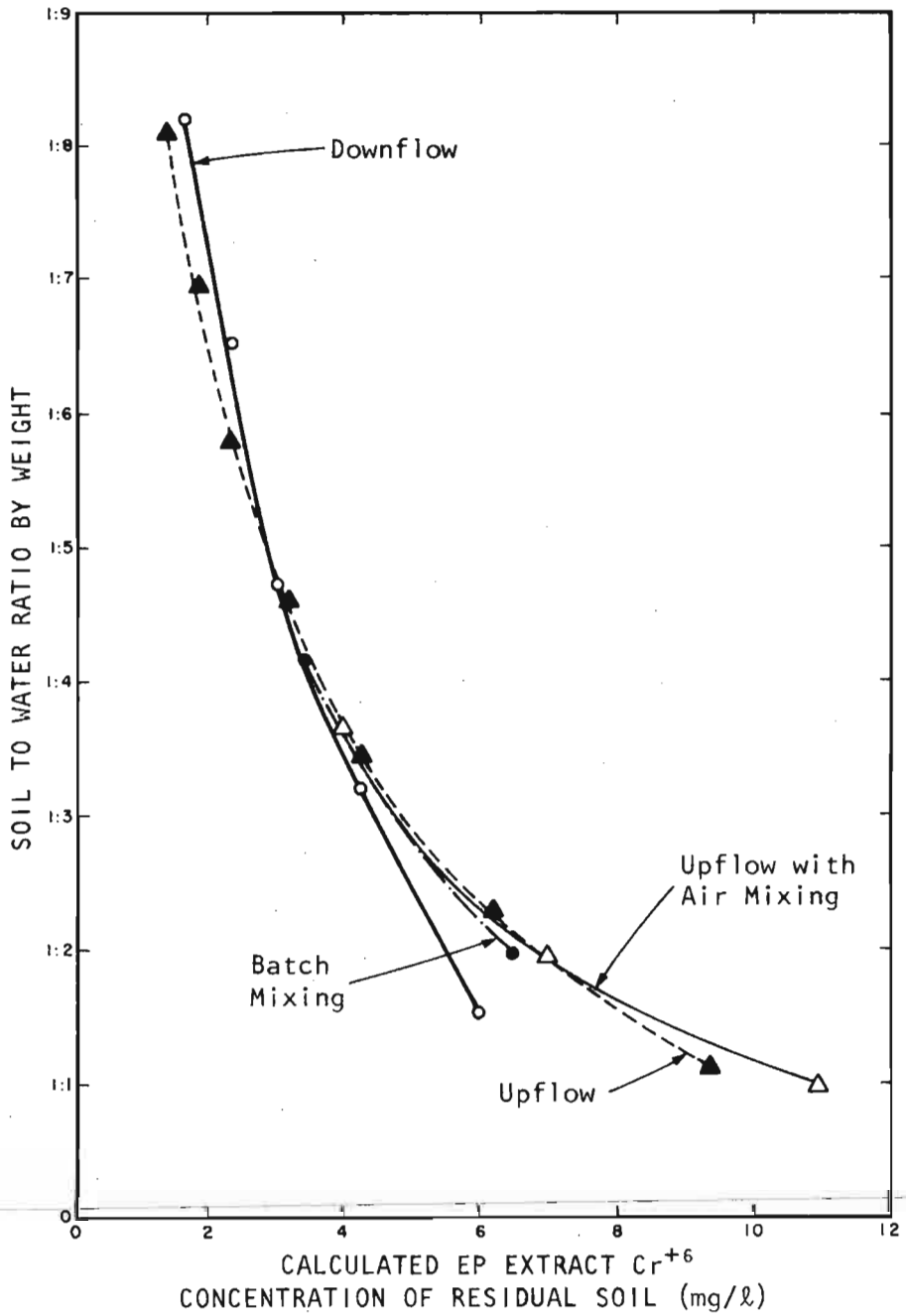

Figure 4. Hexavalent chromium soil residue (EP) concentration vs. weighted soil to water ratio

in the laboratory soil column. For the downflow method, the 1.83 m (6 ft) high, 63.5 mm (2.5 in.) diameter laboratory soil column (Fig. 1) was loaded with 0.6 m (22 in.) of loosely packed soil (calculated pore space as loaded 73%). A total of 0.004 m^3 (0.94 gal) of water was added to the column. The water was held in contact with the soil for 60 min and then allowed to drain out. A total of five water extractions (leachings) were made. A noticeable soil plugging evidently occurred as each successive drain time in the soil column increased with extractions one through five requiring respectively drain times of 3, 5, 15, 25, and 131 min. However, after three extractions, the soil residue Cr^{+6} EP was 3.16 mg/ℓ, which is well below the 5.0 mg/ℓ safe disposal limit. Thus, the progressive soil plugging did not appear to pose a particular problem.

The leachate from each downflow soil washing was measured for pH, Cr^{+6}, and volume; and the residue Cr^{+6} EP was correspondingly determined. The water uptake by the soil, which readily drained out, was less than 1% of the total wash water required for the five extractions. The Cr^{+6} material balance between the original soil sample, the leachate, and the leached soil was very close: approximately 1%, thus giving credence to the analytical procedures used. The weight ratios of the soil (in situ moisture) to wash water versus the residue Cr^{+6} EP for the downflow method are plotted in Figure 4.

The continuous upflow methods, with and without the addition of air, each involved the placing of 8.93 kg (4.41 lb) of the composited chromium-contaminated soil in the laboratory soil leaching column (Fig. 1). The same analytical procedures as followed in the downflow method were used in the upflow methods with the results also plotted on Figure 4. The continuous upflow hydraulic rate (without air addition) for the first 111 min. (Cr^{+6} EP down to 3.25 mg/ℓ) averaged 1.39 x 10^{-6} m^3/s (0.022 gal/min), while the upflow rate with 0.127 standard m^3/hr (4.5 ft^3/hr) of air addition for the first 52 min averaged 2.4 x 10^{-6} m^3/s (0.038 gal/min) (Cr^{+6} EP down to 3.4 mg/ℓ).

The batch mixing procedure consisted of placing 1.3 kg (2.87 lb) of soil in a container, adding 0.002 m^3 (0.55 gal) of water, and mixing for 10 min. After 20 min of settling, the liquid was decanted off for chromium analysis and another 0.002 m^3 of water was added to the remaining leached soil. After two washings, the mixture was allowed to settle for three days

and the amount of leached soil and decanted supernatant was measured. The results were plotted in Figure 4. After the two washings, the soil residue Cr^{+6} EP was 3.5 mg/ℓ.

The solids (soils) carry-over into the supernatant was determined for the first three laboratory leaching methods (excluding batch mixing) after the entire washing cycle was completed. The downflow method leached the Cr^{+6} EP to 1.84 mg/ℓ, while the continuous upflow (without air) method decreased the Cr^{+6} EP to 1.55 mg/ℓ. Under these conditions, the solids carry-over was respectively 11.8 and 13.7% for the downflow and upflow methods; thus, the results are comparable. The soil residue Cr^{+6} EP was only leached to approximately 2.7 mg/ℓ for the continuous flow-with-air method, but the solids carry-over in the supernatant was 20.1% which would probably require more chemicals in downstream treatment as well as result in a greater quantity of final residue of which to be disposed. Obviously, excessive solids carry-over should be avoided. The batch mixing method appeared to result in a high amount of solids in the decanted supernatant, but was not analytically determined. However, resorting to a settling time of three days gave some indication of final or near-final dewatering characteristics of the mixture.

The hydraulic detention time, based on the volume of soil in the laboratory leaching column and on the volume of the wash water, was determined after the soil was leached to a Cr^{+6} EP concentration of <3.5 mg/ℓ. Under these conditions, the hydraulic detention time was respectively 36, 20, 12, and 16 min for the laboratory bench downflow, continuous upflow, continuous upflow with air, and batch mixing methods.

It is apparent from the plots of the soil to water (by weight) versus the soil residue Cr^{+6} EP of the four laboratory leaching methods in Figure 4, that the effectiveness of leaching used is mainly dependent on the soil to wash water ratio and essentially independent of the particular method used. The duration of contact time between the wash water and the soil may make a slight difference in the amount of chromium going into the solution, but under the hydraulic detention times and laboratory methods encountered, the results of the four methods fit a fairly tight narrow band around the 3.5 to 4.0 mg/ℓ Cr^{+6} EP range, which will probably be used in a full-scale facility.

Pilot Plant Soil Leaching Methods

Inasmuch as the method of leaching soil was primarily dependent on the weighted soil to water ratio, the batch (in terms of soil) pilot plant method was used for convenience for the pilot plant studies. Two basic downflow pilot plant methods were studied. The first method utilized a constant water head; the second method involved adding the wash water (batch loaded) at one time, holding the wash water for a given time period, and discharging at a controlled rate. As such, a 0.21-m^3 (55-gal) drum, with both ends removed, was attached to a refabricated 0.21-m^3 drum to provide the height necessary to accept the entire water load at one time (tall chamber).

For the constant head pilot plant method, 116.1 kg (256 lb) of composited, chromium-contaminated soil was added to a refabricated 0.21-m^3 (55-gal) drum to a depth of 0.4 m (16.67 in.), and the water added until the water surface was 0.3 m (12 in.) above the soil. The outflow was maintained at 2.84×10^{-5} m^3/s (0.45 gal/min) (checked every 10 min), and the incoming wash water was adjusted accordingly to maintain the constant 0.3-m head.

Samples were collected for the initial leachate and every 10 min thereafter for a period of 2 hr, at which time the unit was allowed to drain free. The weight ratio of soil to extract water at this time was 1 to 2.63, which from Figure 4 corresponds to a soil residue Cr^{+6} EP concentration of approximatley 4.8 mg/ℓ, if the pilot plant method followed the results of the laboratory soil leaching methods. Actual soil core samples were collected at this time from the center of the drum, 0.5 radius, and along the side. The analytical results on duplicate samples averaged 4.85 mg/ℓ Cr^{+6} EP which is in agreement with the curve of Figure 4. The leaching procedure was again continued until the soil-to-water weight ratio was 1:3.9, which according to Figure 4 would equal a soil residue Cr^{+6} EP value of approximately 3.8 mg/ℓ.

The hydraulic detention time for the constant head leaching chamber was approximately 57 min. The total amount of water leached out for a soil to water ratio of 1:3.9 was 0.45 m^3 (119.4 gal) with a total chromium content of 0.022 kg (0.049 lb) or an average leachate concentration of 48.9 mg/ℓ. The leachate was collected for subsequent treatment.

The tall pilot plant leaching chamber, in which the wash water is added at one time, was loaded with 77.11 kg (170 lb) of soil which resulted in a

height of 279 mm (11 in.) in the chamber. Enough wash water was added, 0.33 m^3 (86.6 gal), to reach a soil to water weight ratio of 1 to 4.25. The hydraulic detention time averaged nearly 15 min.

After leaching was completed, the residue Cr EP (from core samples) averaged 4.0 mg/ℓ. This value compares to approximately 3.6 mg/ℓ in Figure 4, based on a soil to water ratio of 1:4.25. Thus, at the pilot plant level it appears that a hydraulic detention time as low as 15 min tends to reduce the leaching efficiency when compared to the small laboratory column; however, Figure 4 still appears to be applicable. The hydraulic detention time can be easily controlled in the downflow leaching chambers by regulating the outflow.

Chromium Removal In Leachate

pH REDUCTION. From the chromium treatment flow diagram of Figure 3 it can be seen that the leachate from the soil washing operation requires pH reduction to enhance reactions and to decrease the time required for the conversion of Cr^{+6} to Cr^{+3} when a specific chemical reducing agent is added.

The relationships between reaction time and pH for 99% completion of Cr^{+6} to Cr^{+3}, when sodium metabisulfite ($Na_2S_2O_5$) (or sulfur dioxide [SO_2]) is added, are presented in Table 1. The time difference between 5 min at pH 2.0 and 30 min for pH 3.0 is notable and probably within the practical application time range for a full-scale operation. A lower pH level is significant, since with an increase in pH less sulfuric acid (H_2SO_4) and later lime [$Ca(OH)_2$] to restore the pH level to the 8.5 range will be required. However, as shown in Table 1, the reaction time significantly increases at higher pH values. Thus, compromises are necessary according to the mode of chromium treatment operation used.

The quantity of H_2SO_4 required to decrease the pH below approximately 3 is particularly obvious in Figure 5 and can be seen in Table 2 when 9.6 units (by weight in relation to 1.0 unit of Cr^{+6} by weight) of H_2SO_4 are required to reach a pH of 2.2, and only 1.9 units of H_2SO_4 for a pH of 3.0 when the $Na_2S_2O_5$ chemical reduction method is used. When the ferrous sulfate ($FeSO_4$) chemical reduction method is used, additional quantities of H_2SO_4 are required to maintain the pH at a given level. As can be observed in Table 2, 18.0 units of H_2SO_4 are required by the $FeSO_4$ chemical reduction

TABLE 1. RELATION OF REACTION TIME AND pH FOR 99% COMPLETION OF HEXAVALENT TO TRIVALENT CHROMIUM WHEN SODIUM METABISULFITE ADDED

Reaction Time (min)	pH
0.1	1.0
0.5	1.5
5.0	2.0
30.0	3.0
60.0	4.0
200.0	5.0

SOURCE: Eckenfelder (1966, Table 8-1).

method for a pH of 2.5, while only 8.8 units of H_2SO_4 are required for a pH of 2.5 when $Na_2S_2O_5$ is used. The acid was added in a solution of 1N H_2SO_4 and 10 min were allowed for the reaction to reach equilibrium before a sample was taken for Cr^{+6} analysis. As can be observed in Table 2, only about 5% more H_2SO_4 (9.2 vs. 8.8 units) is required for the pilot plant over the laboratory bench operation. In the pilot plant operation H_2SO_4 was added in

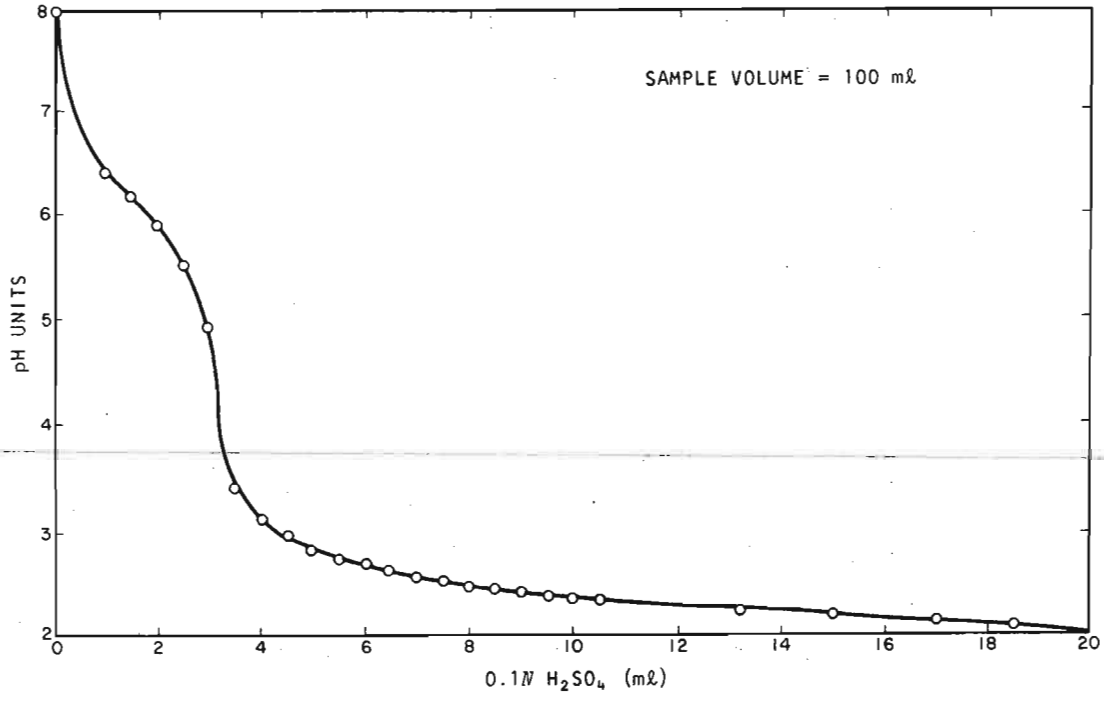

Figure 5. pH vs. quantity of 0.1N sulfuric acid

TABLE 2. RELATIONSHIPS OF CHEMICALS AND PHYSICAL CONDITIONS INVOLVED IN REMOVING 1.0 WEIGHT UNIT OF HEXAVALENT CHROMIUM

	HEX-AVALENT CHRO-MIUM	INITIAL pH	pH REDUC-TION	CHEMICAL ADDITION				pH FINAL	ORP† (mV)	SLUDGE PRODUCED (dry wt)
				Sul-furic Acid	Sodium Metabi-Sulfite	Ferrous Sulfate*	Lime			
Lab. Bench	1.0	8.5	2.2	9.6	3.1	....	8.7	8.5	+320	....
Lab. Bench	1.0	8.2	2.5	8.8	4.1	....	7.2	8.5	+340	3.7
Lab. Bench	1.0	8.0	3.0	1.9	4.2	....	1.7	8.5	+125	....
Lab. Bench	1.0	8.4	2.5	18.0‡	...	15.9	18.6	8.5	+502	16.0
Pilot Plant	1.0	7.5	2.5	9.2	4.0	....	8.4	8.5	+155§	4.6

NOTE: 1.0 weight unit, such as grams, pounds.
*As $FeSO_4 \cdot 7H_2O$.
†Oxidation reduction potential.
‡Additional quantities of H_2SO_4 were added while $FeSO_4$ was added to maintain pH level.
§Calculated to be +190, but taken to +155 to enhance reaction completion.

the concentrated form.

CHEMICAL REDUCTION. Two chemical reduction methods were studied: $Na_2S_2O_5$ and $FeSO_4$, which were reported by Eckenfelder (1980) to be effective for the chemical reduction of Cr^{+6} to Cr^{+3}, a form which can be precipitated out with $Ca(OH)_2$. The $Na_2S_2O_5$ method was tested at three different pH levels, 2.2, 2.5, and 3.0, while $FeSO_4$ was only utilized for a pH of 2.5.

The chemical requirements and the physical conditions for the $Na_2S_2O_5$ reduction method at the 2.5 pH level, as well as at the 2.2 and 3.0 levels, are presented in Table 2. When Cr^{+6} approaches zero, the oxidation reduction potential (ORP) level is +340 mV, while the corresponding values for a pH of 2.2 and 3.0 are respectively +320 and +125 mV (Table 2). As shown in Table 2, the $Na_2S_2O_5$ requirement is lower for a pH of 2.2 (3.1 units) than at pH values of 2.5 and 3.0 (4.1 and 4.2 units respectively); however, higher quantities of H_2SO_4 and $Ca(OH)_2$ are required for the pH 2.2 level. As can be noted in Table 2, the $Na_2S_2O_5$ requirement for the pilot plant study, which was conducted at a pH level of 2.5, is approximately at the same level as that required at the laboratory bench level. For the pilot plant operation, $Na_2S_2O_5$ was added at full strength.

The relationships between Cr^{+6} remaining, ORP, $FeSO_4$ additions, and physical conditions for a pH of 2.5, are shown in Table 2. The use of $FeSO_4$ is effective but, as can be observed in Table 2, more than twice the H_2SO_4 is required for the pH 2.5 level (18.0 vs. 8.8 units) and nearly four times the quantity of $FeSO_4$ is required in comparison to $Na_2S_2O_5$ (15.9 vs. 4.1 units). However, this is somewhat misleading inasmuch as ferrous sulfate is as $FeSO_4 \cdot 7H_2O$, while sodium metabisulfite is as $Na_2S_2O_5$. Nevertheless, the chemicals were purchased in these forms.

Also in considering $FeSO_4$, another of the disadvantages of its use is that the iron added to the sludge will have to be precipitated out, resulting in a higher sludge quantity. The higher sludge value is particularly obvious in Table 2, since 16.0 (dry wt) units of sludge are produced when using $FeSO_4$, while only 3.7 (dry wt) units of sludge result for $Na_2S_2O_5$ in the laboratory bench study portion. This is a major consideration, since the final sludge product will have to be shipped to a Class 1 landfill in the continental U.S., unless it is technically and economically feasible to recover the chromium. If $Na_2S_2O_5$ is assigned a cost value of 1, the cost of SO_2 would be approximately 2, and $FeSO_4$ would be about 3 on a relative basis when cost and quantity requirements are considered.

PRECIPITATION. Once the Cr^{+6} has been chemically reduced to the Cr^{+3} form, the chromium can be effectively (nearly 100%) removed through precipitation, by means of raising the pH to 8.5 with the addition of lime [$Ca(OH)_2$]. For the laboratory bench studies, the $Ca(OH)_2$ was added in a slurry (10 g/ℓ), but in the pilot plant operation the $Ca(OH)_2$ was added at full strength. After the addition of $Ca(OH)_2$ the mixture was stirred for 10 min.

After the $Ca(OH)_2$ addition and stirring operation, the mixture was subjected to quiescent conditions to allow sludge settling. The rate of sludge settling (dewatering characteristics) for the sodium metabisulfite and ferrous sulfate chemical reduction methods are presented in Figure 6. As shown in Figure 6, the sludge for both reduction methods exhibit similar settling characteristics. It is apparent from Figure 6 that sludge dewatering after approximately 90 min is relatively slow.

SLUDGE HANDLING AND TREATMENT. An important factor in considering the economic feasibility of the chromium treatment process is the quantity of processed sludge that requires disposal per quantity of chromium-contaminated soil. An aliquot of 0.016 kg (0.0357 lb) of Cr^{+6} in one treatment container out of a total of 116.12 kg (256 lb; 19% soil moisture) of contaminated soil was used in the pilot plant study (Cr^{+6} EP = 12.4 mg/ℓ). The (prorated) sludge volumes produced after leaching the soil to a Cr^{+6} EP concentration of approximately 3.8 mg/ℓ (1:3.9 soil to water weight ratio) per 2.8 m^3 (100 ft^3) of chromium-contaminated soil were as follows:

Overnight settling	0.388 m^3 (13.7 ft^3)	0.78% solids
3-day settling	0.184 m^3 (6.5 ft^3)	1.65% solids
Centrifugation of 3-day settled sludge	0.079 m^3 (2.8 ft^3)	3.7% solids
Completely dried (moisture free)	0.003 m^3 (0.11 ft^3).	

The above results can also be expressed in a volume or weight per unit of Cr^{+6} removed if desired. The dry weight sludge value for the pilot plant (Table 2) of 4.6 units per unit (weight basis) of Cr^{+6} is approximately 20% higher than the 3.7 value obtained for the laboratory bench studies. A higher pilot plant unit sludge output over the laboratory bench scale study output would be generally expected because there is a tendency to add more than the minimum quantity to chemicals to insure that optimum conditions have been met.

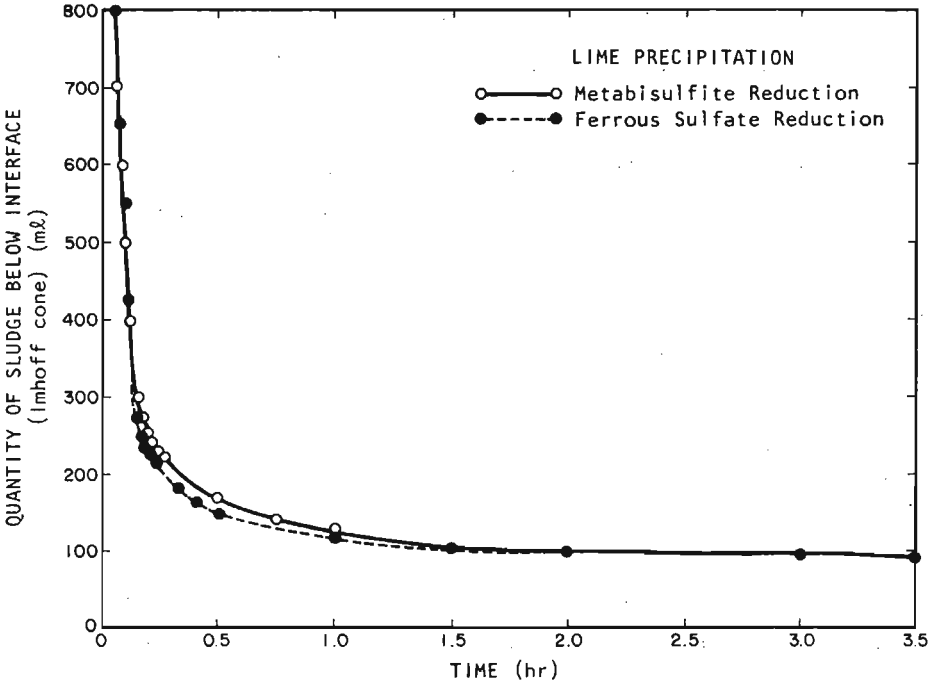

Figure 6. Sludge settling curves for sodium metabisulfite and ferrous sulfate reduction methods with lime

The results of the sand drying bed indicated that the chromium residue sludge could be readily dried under field conditions to a moisture range of <50% H_2O.

Depending on the economic feasibility, any combination of the alternate sludge processing train methods (Fig. 3) may be used. Time did not permit studying other sludge conditioning methods, such as chemicals and heat, which may enhance dewatering. The actual cost of shipping the chromium residue sludge to a Class 1 landfill versus the cost of dewatering/drying would obviously have to be given serious consideration. For example, the quantity of sludge (based on pilot plant results) that would be produced for 1 841 m^3 (65,000 ft^3) of chromium-contaminated soil would be approximately 1211 drums (0.208 m^3 [55 gal]) for overnight sludge settling and only about 9 drums if the sludge were completely dry. The quantity could be potentially reduced even more since 22.6% of the dried matter is volatile. Thus, the potential incentive for sludge drying is apparent.

According to the results of the pilot plant study, the materials required and products obtained for a 1.0 m^3 (35.31 ft^3) increment of in situ chromium-contaminated soil (19% moisture and a specific gravity of 1.2) to decrease the Cr^{+6} EP concentration to approximately 3.8 mg/ℓ are shown in Figure 7.

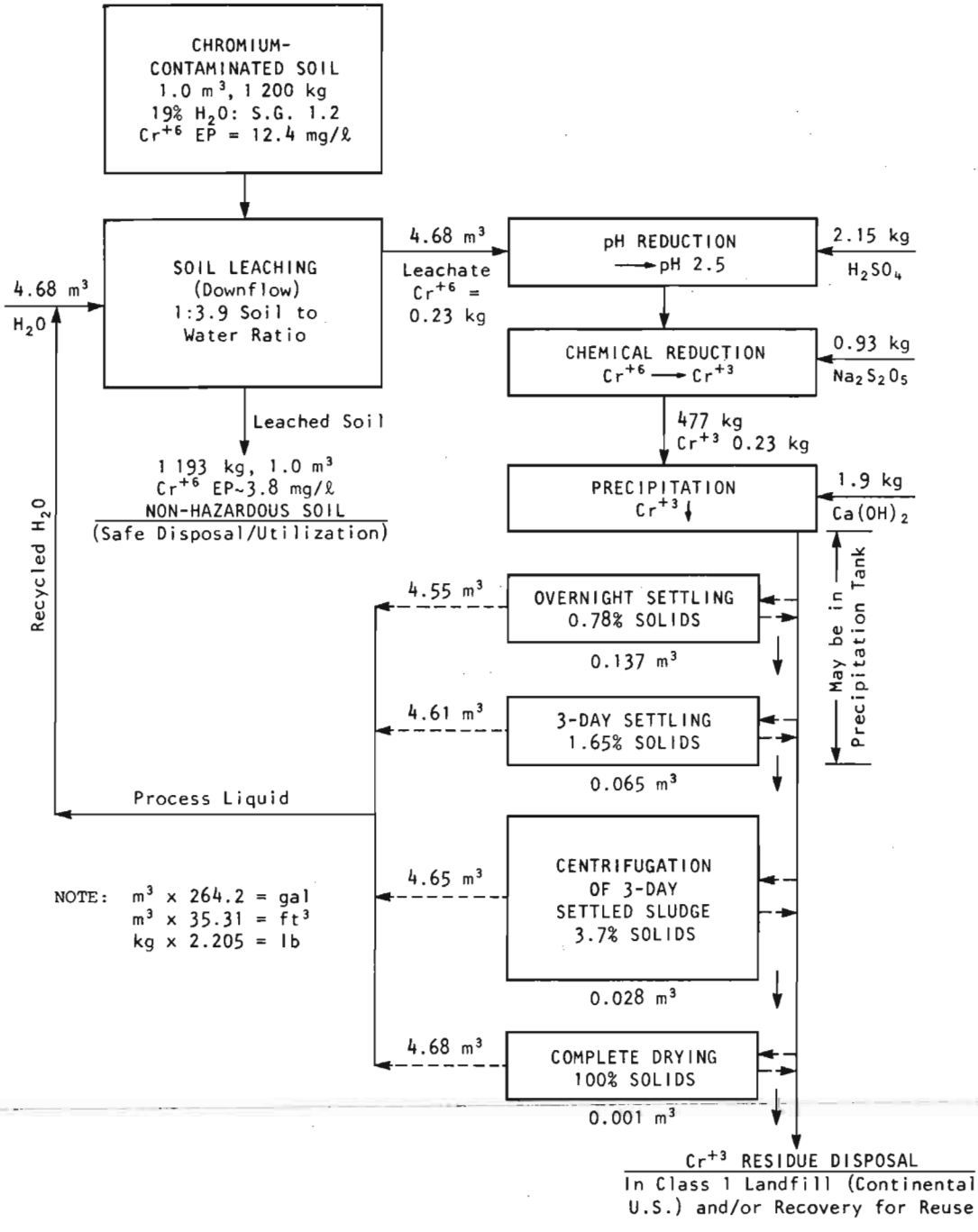

Figure 7. Laboratory bench and pilot plant investigation sequence for chromium treatment

FULL-SCALE TREATMENT OPERATION

In response to a call for proposals by the U.S. Navy for the removal of the approximately 1 841 m^3 (65,000 ft^3) of stored chromium-contaminated soil by either shipping the entire untreated volume to a Class 1 landfill in the continental U.S., or treating the soil to a safe level for local disposal/reuse and only shipping the concentrated chromium residue to a Class 1 landfill, the treatment option produced the lower bidders. The contract for the treatment was awarded in the summer of 1982 to the low bidder, Advanced Environmental Consultants, Inc. (AEC) in Pittsburgh, Pennsylvania. The contract to WRRC was extended into Phase 2 to provide monitoring and technical services during the operation of the full-scale treatment facility.

The treatment proposed initially by AEC was basically the same process utilized in the Phase 1 pilot plant study except that the soil/rock mixture was crushed for passage through small diameter pipes during the chromium leaching process, and sodium hydroxide was used to raise the pH prior to adding lime (which was used to precipitate the chromium out of solution). The pH was increased by using sodium hydroxide, rather than relying entirely on lime as in Phase 1, so that the final quantity of lime-based sludge was reduced. Quality chromium tests, laboratory studies, and a proposed treatment process were prepared in report-type forms by the AEC (Advanced Environmental Consultants, Inc. 1982a,b,c). The AEC laboratory findings essentially confirmed the Phase 1 results.

The soil treatment facilities at the Pearl Harbor Naval Shipyard's Building 3A site were established in August and September 1982 with the testing of equipment and procedures during the latter part of September and the first part of October. The crushing of the soil/rock mixture proved too time consuming and costly. Thereafter, modified 1.53-m^3 (2-yd^3) dumpsters (using the upflow/downflow washing principal) were substituted for the crushing/leaching treatment component (Sain 1982). The actual full-scale treatment process commenced just past mid-October 1982.

Although the proposed treatment process methods and facility plans were prepared and distributed on a limited basis to the U.S. Navy and WRRC (Advanced Environmental Consultants, Inc. 1982a,b,c), the actual process (wash-water-detention times, number of wash/flow-through times, type, and amount of chemicals used) was the responsibility of the contractor, and is thus not available for public distribution. The contractor was essentially only re-

quired to remove the soil from Building 3A and safely treat and dispose of it in an acceptable and legal manner within the contract time limit. Thus, the details of the treatment process were considered the contractor's privileged or proprietary information.

After the approximately 1.53 m^3 modified dumpsters were selected as the soil treatment units, it was directed that three separate soil samples be taken from each dumpster load following treatment from, as much as possible, the top third, middle third, and the bottom third of the individually dumped piles (Mau 1982).

The U.S. Navy's Resident Officer in Charge of Construction (ROICC) was responsible for collection of the treated soil samples (Mau 1982). The composited treated soil samples were collected in 0.45- to 0.91-kg (1-2 lb) lots and placed in plastic bags provided by the WRRC. The bags containing the samples were picked up daily at the treatment site and transported to the Sanitary Engineering Research Laboratory, University of Hawaii at Manoa, for analysis. The analyses were required to be reported back to AEC within 48 hr, with samples containing >5 mg/ℓ chromium extract to be reported also to the ROICC and the Navy's project design engineer. In addition, WRRC also periodically collected random composited samples from the individually treated piles as a double check. The ROICC was responsible for granting permission to the AEC for the disposal of the treated soil by hauling it to the U.S. Navy's Barbers Point landfill located approximately 29 km (18 miles) from the treatment site. The analysis for the chromium EP concentration followed the same procedures as were used in laboratory and pilot plant study. Each processed soil batch (nearly all 1.53 m^3 [2 yd^3] dumpster units) were monitored for chromium extract by WRRC. Of the approximately 1,200 dumpster loads treated, only 35 exceeded the 5-mg/ℓ limit and these were reprocessed. The full-scale treatment operation were completed at the end of December 1982. The results of the Phase 2 was reported in a special report (Dugan, Gee, and Lau 1983).

RANDOM SAMPLING AND ANALYSIS OF SOIL AT DISPOSAL SITE

As a final confirmation of the success of the full-scale treatment process, the U.S. Navy requested a random sampling and chromium analysis of the approximately 1 836 m^3 (2400 yd^3) of treated soil that was deposited at the

U.S. Navy's Barbers Point Landfill site. The treated soil was trucked to the landfill site in approximately 7.65-m^3 (10-yd^3) lots, with the result that the receiving site consisted of numerous small overlapping mounds of treated soil. The treated soil was being used as a sealing cover for the refuse at the landfill and, at the time of the initial treated soil sampling visit on 18 May 1983, approximately one-half of the deposited treated soil appeared to have already been removed for sealing use.

On the initial treated soil sampling visit, some chromium bleeding was observed, as evident by green coloring, and the deposited treated soil was noted to have significantly dried out, particularly near the outer edges. This resulted in an average moisture content of approximately 10%, whereas the moisture content of the treated soil prior to transporting to the landfill site averaged nearly 25%. This compares to a 19% moisture content when the soil was stored under covered conditions in Building 3A prior to treatment.

Chromium concentrations are considered to be based on in situ soil moisture conditions since no provision is made to adjust the hazardous waste concentration in relation to the soils moisture content. Consequently, a soil devoid of moisture, with a chromium extract of 6.67 mg/ℓ, would be 6.0 mg/ℓ at a 10% soil moisture content and 5.0 mg/ℓ at 25%. Thus, when specific analysis produces chromium extract concentrations of $\leqslant$5.0 mg/ℓ, reductions in the soil moisture content would be critical in terms of legal acceptance.

The sampling procedure during the initial visit to the landfill on 18 May 1983 consisted of collecting aliquots of samples down to depths of about 150 mm (6 in.) at several points at eight randomly selected treated soil mounds. Of the eight samples four exceeded the 5 mg/ℓ (Cr^{+6}) chromium extract limit. The results ranged from 2.0 to 8.0 mg/ℓ, with a mean value of 5.35 mg/ℓ and a median of 5.5 mg/ℓ. These high chromium extract values, even considering the concentrating effect because of drying, were unexpected. Thus, a more extensive and systematic monitoring procedure was warranted.

The more systematic chromium monitoring scheme was conducted on 6 June 1983, with 20 sampling sites being laid out in an approximate grid pattern over the overlapping treated soil mounds. Soil samples were collected in the same manner as during the initial sampling, i.e., at several points around the identified sampling site and at depths down to 0.15 m (6 in.).

Each sampling site was identified with a numbered (1-20) wooden stake, in case a resampling of the mound area was necessary. The results of the 20 analyses produced a chromium extract mean of 4.6 mg/ℓ, a median of 4.3 mg/ℓ, and a range of 3.0 to to 8.2 mg/ℓ. A total of seven out of the 20 samples exceeded the 5-mg/ℓ limit.

The seven sample sites which exceeded the limit were resampled on 22 June 1983. Because of the drier conditions near the perimeter of the mound, a more concerted effort was made to dig deeper into the piles at numerous points around the mound site to obtain a more uniform composite sample. Analysis of the samples from the seven sites indicated a chromium extract range of 2.6 to 4.5 mg/ℓ.

Even after treatment, the chromium-contaminated soil still proved to have a somewhat heterogenous chromium concentration which was altered by varying soil moisture. Overall, the monitoring of the treated soil at the landfill indicated that the unspread treated soil was within the 5.0 mg/ℓ chromium extract limit; however, there are apparently small patches of drier treated soil around the outer edges of some mounds that exceed the 5-mg/ℓ limit.

ACKNOWLEDGMENTS

Appreciation is extended to Francis K.Y. Mau and Vernon K. Yamamoto of the Environmental Branch, Pacific Naval Facilities Engineering Command, and the personnel of Advanced Environmental Consultants, Inc., Pittsburgh, Pennsylvania, for their assistance; the Water Resources Research Center for providing the laboratory facilities and space for the project and also the untiring efforts of the WRRC staff; Jared H.M. Lum, graduate laboratory assistant, for conducting the atomic absorption spectophotometric analysis on a 7-day/wk basis; Manfred Zapka, graduate research assistant, for assisting in the laboratory and pilot plant study; and Daniel Dugan, field assistant, for collecting and picking up the samples and assisting in the laboratory.

REFERENCES

Advanced Environmental Consultants, Inc. 1982a. Final quality assurance/quality control report chromium waste treatment and disposal Naval Shipyard, Pearl Harbor, Hawaii, Project No. 82-801. Report to U.S. Naval Facilities Engineering Command, Contract No. N62471-82-C-1364.

_____. 1982b. Final laboratory report chromium waste treatment and disposal Naval Shipyard, Pearl Harbor, Hawaii, Project No. 82-801. Report to U.S. Naval Facilities Engineering Command, Contract No. N62471-82-C-1364.

_____. 1982c. Final design report chromium waste treatment and disposal Naval Shipyard, Pearl Harbor, Hawaii, Project No. 82-801. Report to U.S. Naval Facilities Engineering Command, Contract No. N62471-82-C-1364.

American Public Health Association, American Water Works Association, and Water Pollution Control Federation. 1980. Standard methods for the examination of water and wastewater. 15th ed. Washington, D.C.: APHA, AWWA, and WPCF.

Dugan, G.L.; Gee, H.K.; and Lau, L.S. 1982. "Decontamination of chromium-contaminated soil and water: Pearl Harbor Naval Shipyard, Pearl Harbor, Hawai'i, Phase 1." Spec. Rep. 1:4:82, Water Resources Research Center, University of Hawaii at Manoa, Honolulu. 30 p.

_____; _____; and _____. 1983. "Decontamination of chromium-contaminated soil and water: Pearl Harbor Naval Shipyard, Pearl Harbor, Hawai'i, Phase 2." Spec. Rep. 1:10:83, Water Resources Research Center, University of Hawaii at Manoa, Honolulu. 37 p.

Eckenfelder, W.W., Jr. 1966. Industrial water pollution control. New York: McGraw-Hill.

_____. 1980. Principles of water quality management. Boston: CBI Publishing.

Mau, F.K.Y. 1981a. "Chrome contaminated soil from new pipe shop at Pearl Harbor Naval Shipyard." Memorandum from 114 to 09A via 09B, 21 August 1981, U.S. Department of the Navy, Pacific Division, Naval Facilities Engineering Command, Pearl Harbor, Honolulu, Hawaii.

_____. 1981b. "Chromium decontamination project, NAVSHPYD PEARL." Memorandum from 114 to 09A via 09B, 16 October 1981, U.S. Department of the Navy, Pacific Division, Naval Facilities Engineering Command, Pearl Harbor, Honolulu, Hawaii.

_____. 1982. "Monitoring plan for chromium waste treatment and disposal contract N62471-82-C-1364, revision 3 or 21 October 1982." Letter (25 October 1982) from Commander, Pacific Division, Naval Facilities Engineering Command, Pearl Harbor, Hawaii to Resident Officer in Charge of Construction, Pearl Harbor Naval Shipyard.

Sain, S. 1982. "Chromium waste treatment and disposal modified soil treatment." Memorandum (Project No. 82-801) to Bob Moriyama, Resident Officer in Charge of Construction, Pearl Harbor Naval Shipyard, Pearl Harbor, Hawaii.

U.S. Environmental Protection Agency. 1980. Test methods for evaluating solid wastes, physical and chemical methods. EPA SW-846-1980, Office of Water and Waste Management, Washington, D.C.

Yamamoto, V.K. 1981. "Preliminary laboratory tests for removal of chromium from soil." U.S. Department of Navy, Pacific Division, Naval Facilities Engineering Command, Pearl Harbor, Hawaii.